CONTENT INDEXING

01. INDEX
02.Modify note
03.Block Diagram
04.SYSTEM POWER DIAGRAM
05.DC/CHARG
06.SYSTEM POWER
07.USB OTG/VIB
08.DDR3
09.FLASH/TF CARD
10.GPIO
11.AUDIO
12.LCD PANEL
13.TOUCH PANEL/Light Sensor
14.HDMI
15.Camera/G_Sensor/Key/compass
16.WIFI&3G
17.WIFI/BT/FM/GPS 4IN1 or 2IN1

PCB POWER WIRE WIDTH INDICATE

	above 80 miles
	above 50 miles
	above 30 miles
	above 16 miles
No indicate	Under needs

6 LAYERS PCB STACK

TOP		Hoz(18um) + plating copper(18um)
	Prepreg 3313*1 4.0MIL(0.10mm)	
GND		1oz(35um)
	Core 3.94MIL(0.1mm)	
POWER(S1)		1oz(35um)
	Adjust	
S1(S2)		1oz(35um)
	Core 3.94MIL(0.1mm)	
GND(POWER)		1oz(35um)
	Prepreg 3313*1 4.0MIL(0.10mm)	
S2(BOTTOM)		Hoz(18um) + plating copper(18um)

Version	Date	Author	Change Note	Note
V1.0	20130118	LVJQ	First edictor	

Rockchip 瑞芯微电子 福州瑞芯微电子有限公司	
Title: Modify note	
File: RK3188_REF_ACT8846_1CELL	REV:1.0
Create Date: Friday, January 18, 2013	Page Num:2
Modify Date: Friday, February 01, 2013	Page Total:17

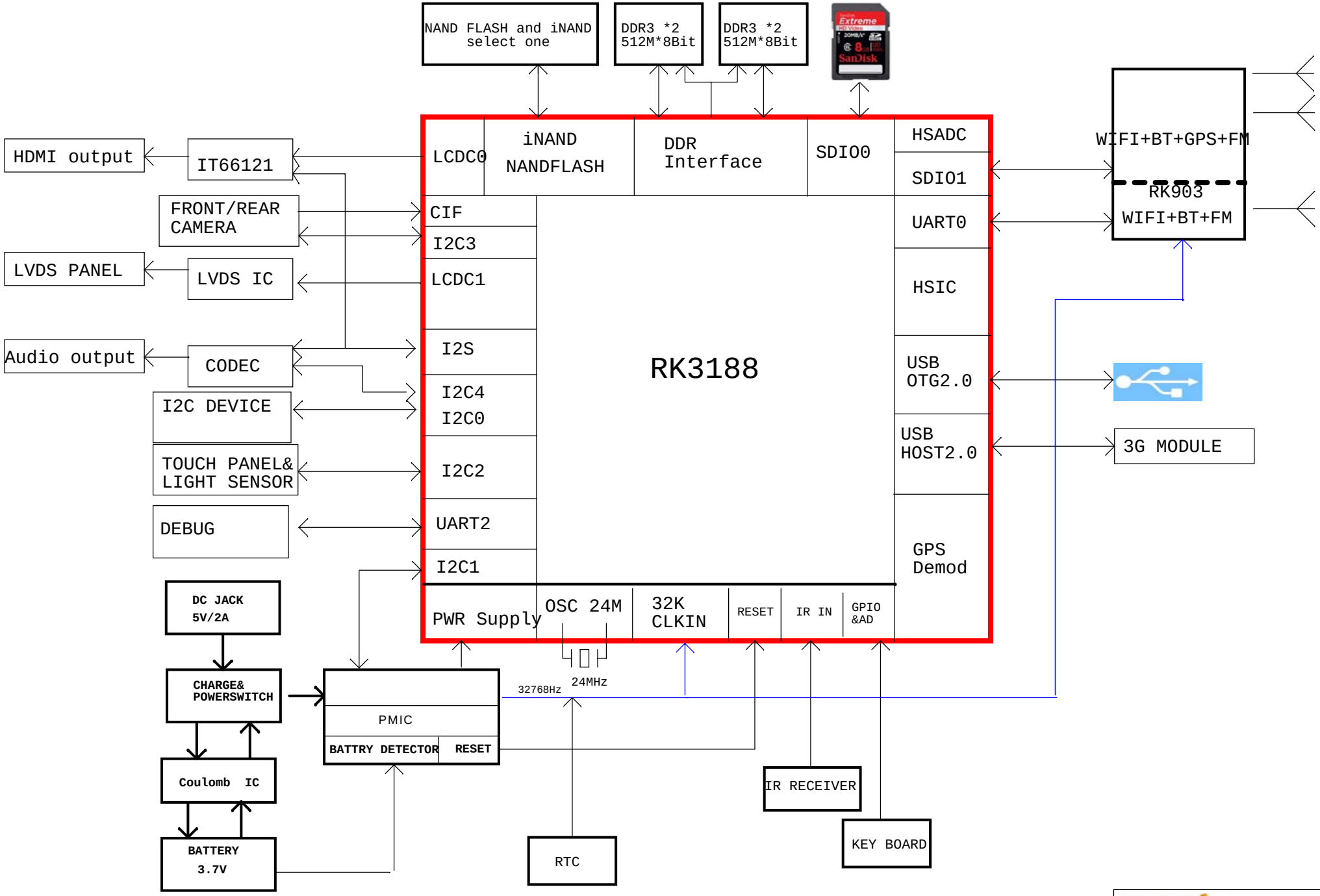

Rockchip 瑞芯微电子 福州瑞芯微电子有限公司		
Title: Block Diagram		
File: RK3188_REF_ACT8846_1CELL		REV:1.0
Create Date: Friday, January 18, 2013		Page Num:3
Modify Date: Friday, February 01, 2013		Page Total:17

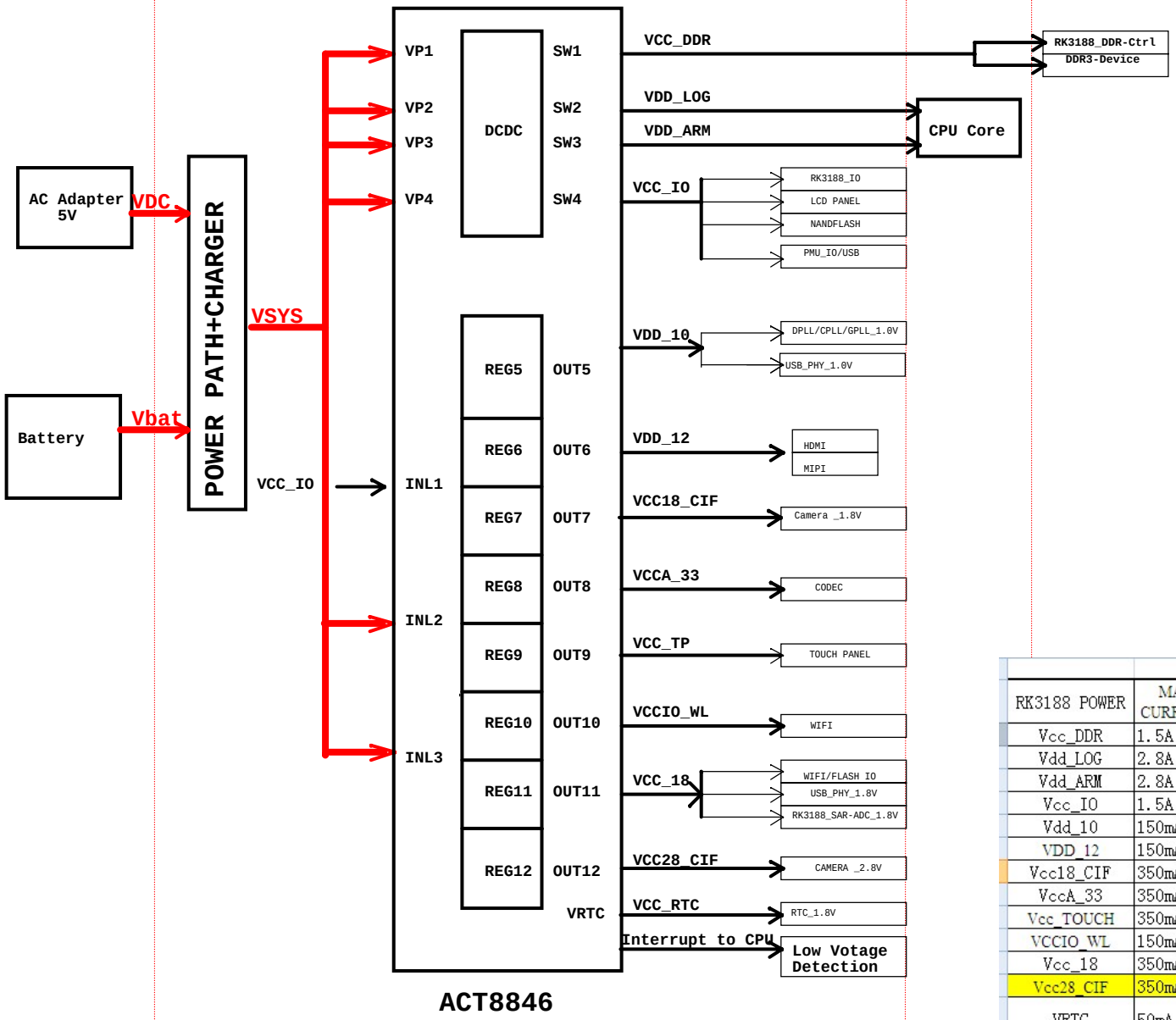

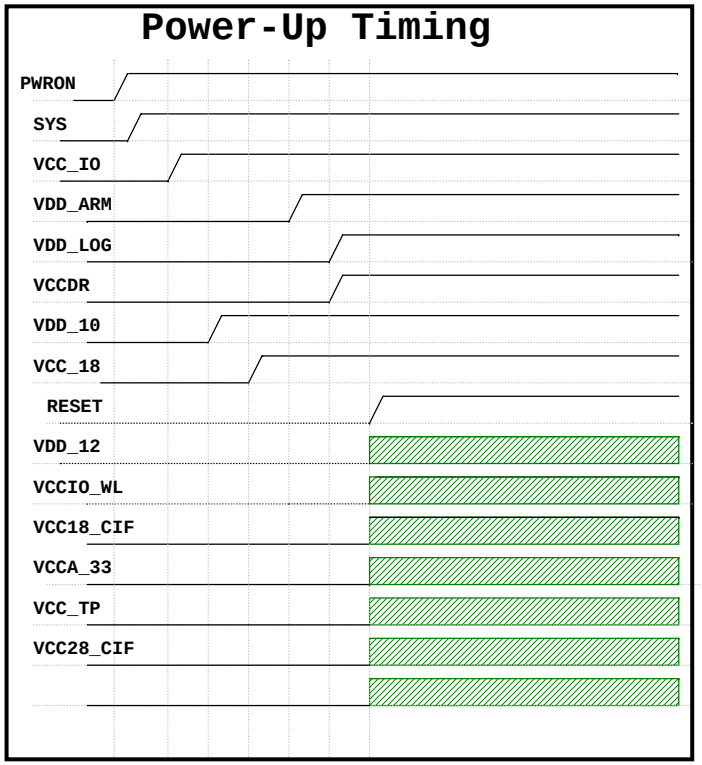

RK3188 POWER	MAX CURRENT	DEFAULT VOLTAGE	POWER UP ORDER	ON/OFF@SLEEP	备注
Vcc_DDR	1.5A	1.2V/ON	5		DDR
Vdd_LOG	2.8A	1.0V/ON	5		LOGIC
Vdd_ARM	2.8A	1.0V/ON	4	ARM OFF	ARM
Vcc_IO	1.5A	3.0V/ON	1		I/O
Vdd_10	150mA	1.0V/ON	2		PLL, PMU
VDD_12	150mA	1.2V/OFF			HDMI@MIPI
Vcc18_CIF	350mA	1.8V/OFF			CAMERA
VccA_33	350mA	3.3V/OFF			CODEC
Vcc_TOUCH	350mA	3.3V/OFF			TP
VCCIO_WL	150mA	3.3V/OFF			WIFI
Vcc_18	350mA	1.8V/ON	3		USB, ADC, FALSH IO /CODEC
Vcc28_CIF	350mA	2.8V/OFF			CAMERA
VRTC	50mA	1.8V/ ALWAYS ON			

上电时序每级间隔2ms

POWER DIAGRAM

Rockchip 瑞芯微电子 福州瑞芯微电子有限公司	
Title: System power diagram	
File: RK3188_REF_ACT8846_1CELL	REV:1.0
Create Date: Friday, January 18, 2013	Page Num:4
Modify Date: Friday, February 01, 2013	Page Total:17

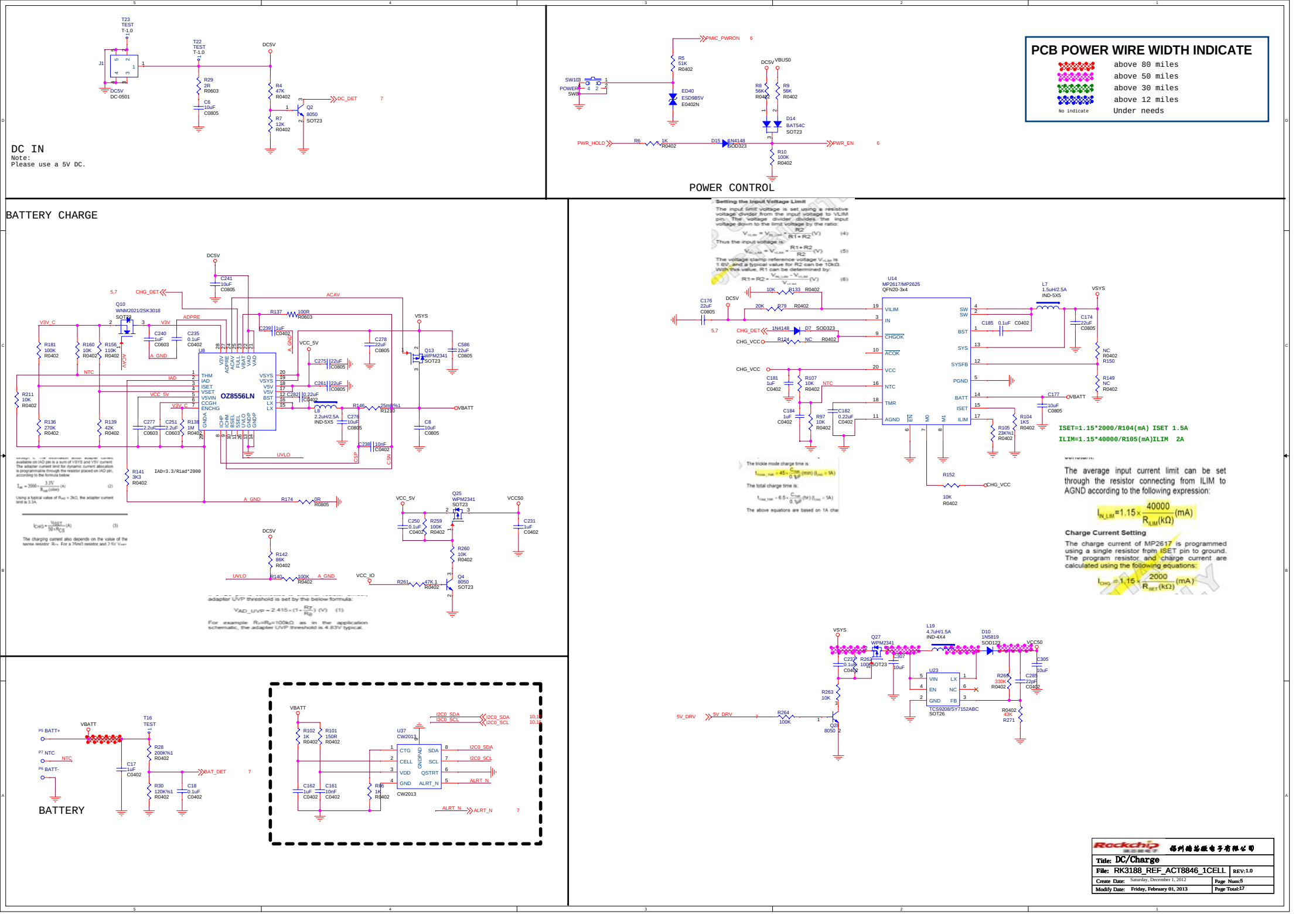
DC IN
Note:
Please use a 5V DC.
POWER CONTROL
PCB POWER WIRE WIDTH INDICATE
above 80 miles
above 50 miles
above 30 miles
above 12 miles
No indicate
Under needs
BATTERY CHARGE
OZ8556LN
MP2617/MP2625
QFN20-3x4
BATTERY
Rockchip
Title: DC/Charge
File: RK3188_REF_ACT8846_1CELL
REV:1.0
Create Date: Saturday, December 1, 2012
Modify Date: Friday, February 01, 2013
Page Num:5
Page Total:17

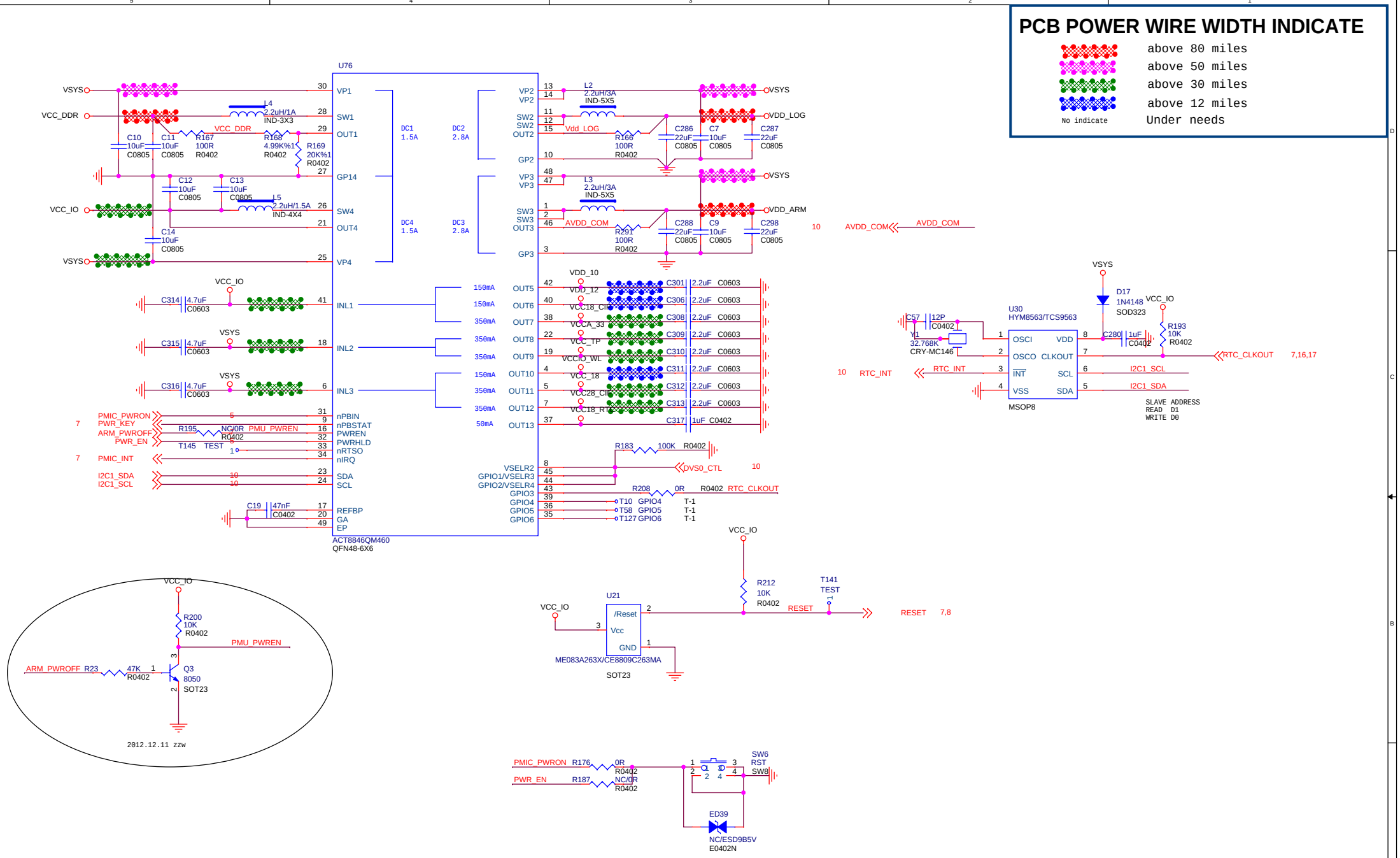

SYSTEM POWER

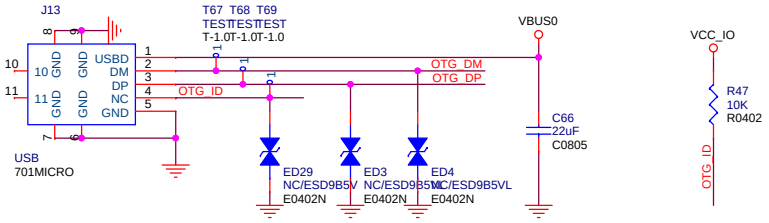

USB OTG CONNECTOR

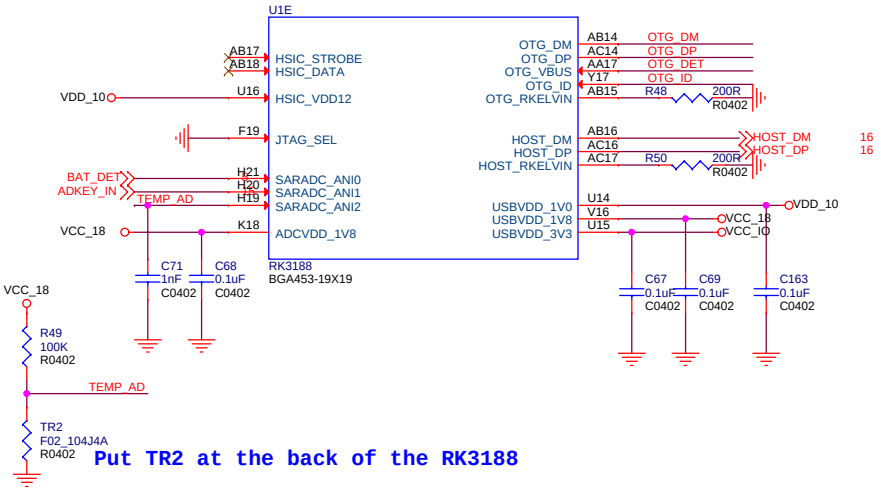

RK3188_E

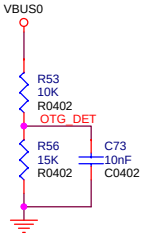

USB_DET

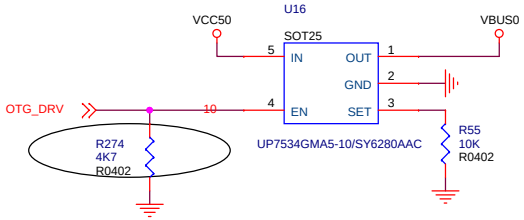

Curent limit 640mA

USB HOST POWER

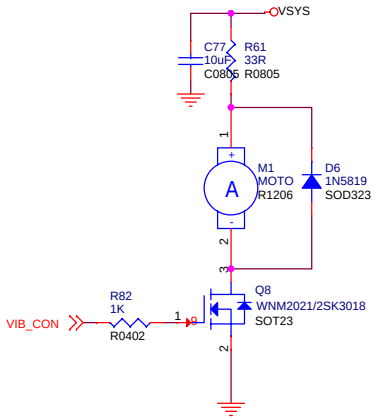

VIBRATION

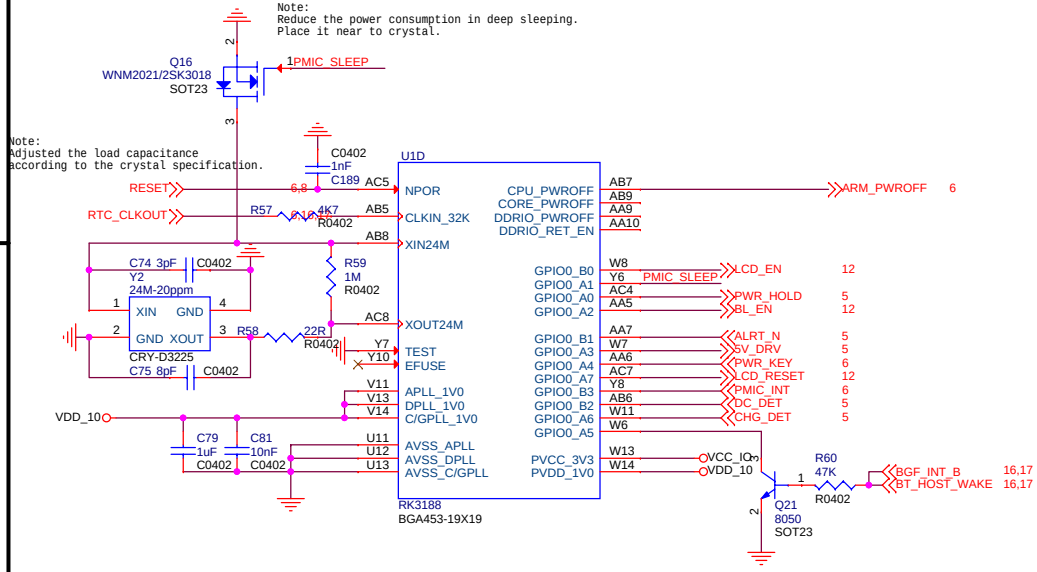

RK3188_D

Rockchip 瑞芯微电子	福州瑞芯微电子有限公司
Title: USB OTG/VIB	
File: RK3188_REF_ACT8846_1CELL	REV:1.0
Create Date: Friday, January 18, 2013	Page Num:7
Modify Date: Friday, February 01, 2013	Page Total:17

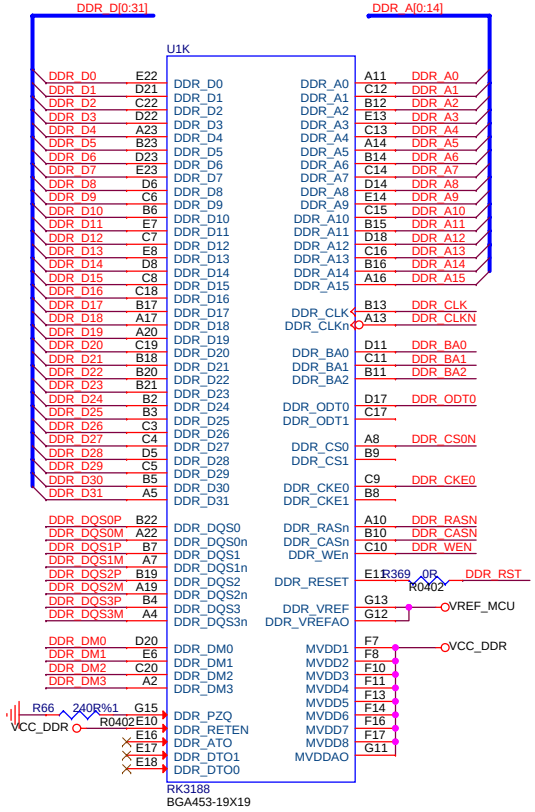

RK3188_K

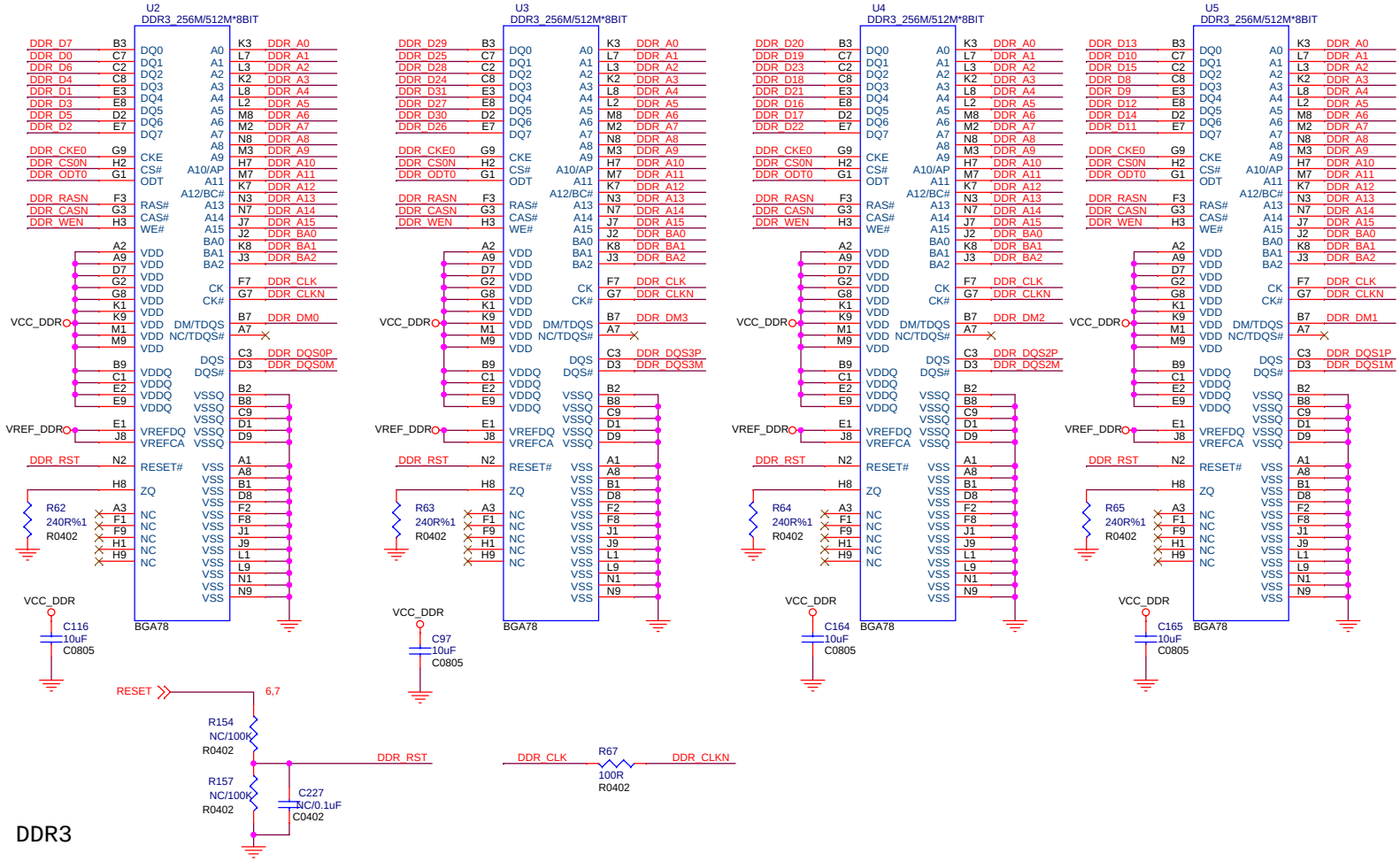

DDR3

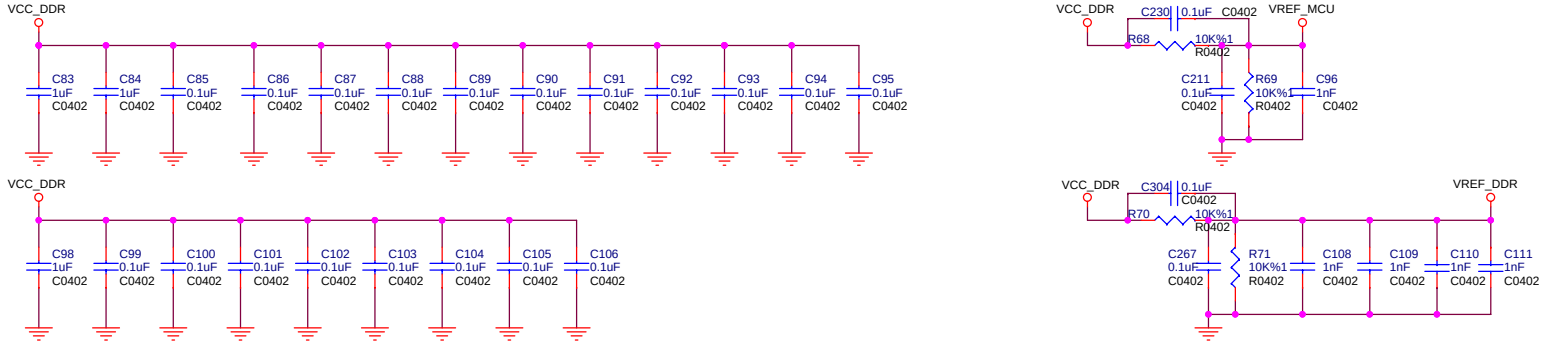

DDR FILTER

Rockchip 瑞芯微电子	福州瑞芯微电子有限公司
Title: DDR3	
File: RK3188_REF_ACT8846_1CELL	REV:1.0
Create Date: Friday, January 18, 2013	Page Num:8
Modify Date: Friday, February 01, 2013	Page Total:17

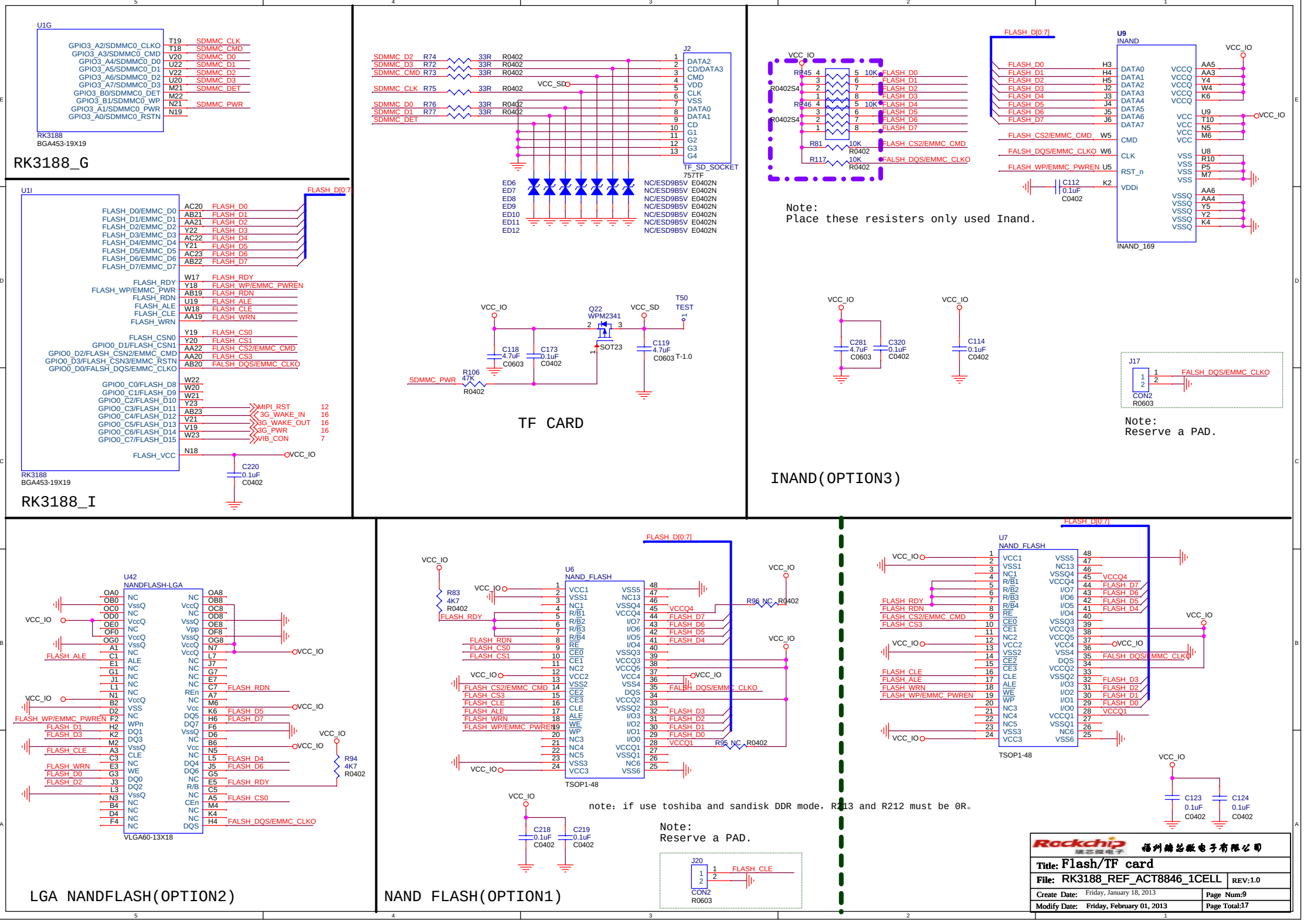
U1G
GPIO3_A2/SDMMC0_CLKO T19 SDMMC_CLK
GPIO3_A3/SDMMC0_CMD T18 SDMMC_CMD
GPIO3_A4/SDMMC0_D0 V20 SDMMC_D0
GPIO3_A5/SDMMC0_D1 U22 SDMMC_D1
GPIO3_A6/SDMMC0_D2 V22 SDMMC_D2
GPIO3_A7/SDMMC0_D3 U20 SDMMC_D3
GPIO3_B0/SDMMC0_DET M21 SDMMC_DET
GPIO3_B1/SDMMC0_WP M22
GPIO3_A1/SDMMC0_PWR N21 SDMMC_PWR
GPIO3_A0/SDMMC0_RSTN N19
RK3188
BGA453-19X19
RK3188_G
U1I
FLASH_D[0:7]
FLASH_D0/EMMC_D0 AC20 FLASH_D0
FLASH_D1/EMMC_D1 AB21 FLASH_D1
FLASH_D2/EMMC_D2 AA21 FLASH_D2
FLASH_D3/EMMC_D3 Y22 FLASH_D3
FLASH_D4/EMMC_D4 AC22 FLASH_D4
FLASH_D5/EMMC_D5 Y21 FLASH_D5
FLASH_D6/EMMC_D6 AC23 FLASH_D6
FLASH_D7/EMMC_D7 AB22 FLASH_D7
FLASH_RDY W17 FLASH_RDY
FLASH_WP/EMMC_PWR Y18 FLASH_WP/EMMC_PWREN
FLASH_RDN AB19 FLASH_RDN
FLASH_ALE U19 FLASH_ALE
FLASH_CLE W18 FLASH_CLE
FLASH_WRN AA19 FLASH_WRN
FLASH_CSN0 Y19 FLASH_CS0
GPIO0_D1/FLASH_CSN1 Y20 FLASH_CS1
GPIO0_D2/FLASH_CSN2/EMMC_CMD AA22 FLASH_CS2/EMMC_CMD
GPIO0_D3/FLASH_CSN3/EMMC_RSTN AA20 FLASH_CS3
GPIO0_D0/FALSH_DQS/EMMC_CLKO AB20 FALSH_DQS/EMMC_CLKO
GPIO0_C0/FLASH_D8 W22
GPIO0_C1/FLASH_D9 W20
GPIO0_C2/FLASH_D10 W21
GPIO0_C3/FLASH_D11 Y23 MIPI_RST 12
GPIO0_C4/FLASH_D12 AB23 3G_WAKE_IN 16
GPIO0_C5/FLASH_D13 V21 3G_WAKE_OUT 16
GPIO0_C6/FLASH_D14 V19 3G_PWR 16
GPIO0_C7/FLASH_D15 W23 VIB_CON 7
FLASH_VCC N18 VCC_IO
C220 0.1uF C0402
RK3188
BGA453-19X19
RK3188_I
SDMMC_D2 R74 33R R0402
SDMMC_D3 R72 33R R0402
SDMMC_CMD R73 33R R0402
SDMMC_CLK R75 33R R0402
SDMMC_D0 R76 33R R0402
SDMMC_D1 R77 33R R0402
SDMMC_DET
VCC_SD
J2
DATA2 CD/DATA3 CMD VDD CLK VSS DATA0 DATA1 CD G1 G2 G3 G4
TF_SD_SOCKET
757TF
ED6 NC/ESD9B5V E0402N
ED7 NC/ESD9B5V E0402N
ED8 NC/ESD9B5V E0402N
ED9 NC/ESD9B5V E0402N
ED10 NC/ESD9B5V E0402N
ED11 NC/ESD9B5V E0402N
ED12 NC/ESD9B5V E0402N
VCC_IO
Q22
WPM2341
SOT23
VCC_SD
T50
TEST
C118 4.7uF C0603
C173 0.1uF C0402
C119 4.7uF C0603
T-1.0
SDMMC_PWR
R106 47K R0402
TF CARD
VCC_IO
RP45 R0402S4
RP46 R0402S4
FLASH_D0 FLASH_D1 FLASH_D2 FLASH_D3 FLASH_D4 FLASH_D5 FLASH_D6 FLASH_D7
R81 10K R0402 FLASH_CS2/EMMC_CMD
R117 10K R0402 FALSH_DQS/EMMC_CLKO
Note:
Place these resisters only used Inand.
U9
INAND
FLASH_D[0:7]
FLASH_D0 FLASH_D1 FLASH_D2 FLASH_D3 FLASH_D4 FLASH_D5 FLASH_D6 FLASH_D7
FLASH_CS2/EMMC_CMD W5
FALSH_DQS/EMMC_CLKO W6
FLASH_WP/EMMC_PWREN U5
C112 0.1uF C0402
INAND_169
VCC_IO
C281 4.7uF C0603
C320 0.1uF C0402
C114 0.1uF C0402
J17
FALSH_DQS/EMMC_CLKO
CON2
R0603
Note:
Reserve a PAD.
INAND(OPTION3)
U42
NANDFLASH-LGA
VCC_IO
FLASH_ALE
FLASH_WP/EMMC_PWREN
FLASH_D1
FLASH_D3
FLASH_CLE
FLASH_WRN
FLASH_D0
FLASH_D2
FLASH_RDN
FLASH_D5
FLASH_D7
FLASH_D4
FLASH_D6
FLASH_RDY
FLASH_CS0
FALSH_DQS/EMMC_CLKO
R94 4K7 R0402
VLGA60-13X18
LGA NANDFLASH(OPTION2)
U6
NAND_FLASH
FLASH_D[0:7]
R83 4K7 R0402
FLASH_RDY
FLASH_RDN
FLASH_CS0
FLASH_CS1
FLASH_CS2/EMMC_CMD
FLASH_CS3
FLASH_CLE
FLASH_ALE
FLASH_WRN
FLASH_WP/EMMC_PWREN
FALSH_DQS/EMMC_CLKO
R96 NC R0402
R95 NC R0402
TSOP1-48
C218 0.1uF C0402
C219 0.1uF C0402
note: if use toshiba and sandisk DDR mode, R213 and R212 must be 0R。
Note:
Reserve a PAD.
J20
FLASH_CLE
CON2
R0603
NAND FLASH(OPTION1)
U7
NAND_FLASH
FLASH_D[0:7]
FLASH_RDY
FLASH_RDN
FLASH_CS2/EMMC_CMD
FLASH_CS3
FLASH_CLE
FLASH_ALE
FLASH_WRN
FLASH_WP/EMMC_PWREN
FALSH_DQS/EMMC_CLKO
TSOP1-48
C123 0.1uF C0402
C124 0.1uF C0402
Rockchip
福州瑞芯微电子有限公司
Title: Flash/TF card
File: RK3188_REF_ACT8846_1CELL
REV:1.0
Create Date: Friday, January 18, 2013
Page Num:9
Modify Date: Friday, February 01, 2013
Page Total:17

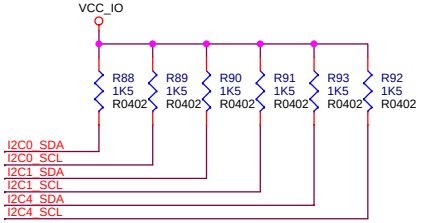

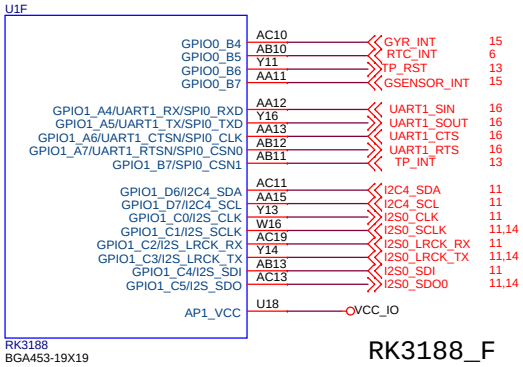

RK3188_F

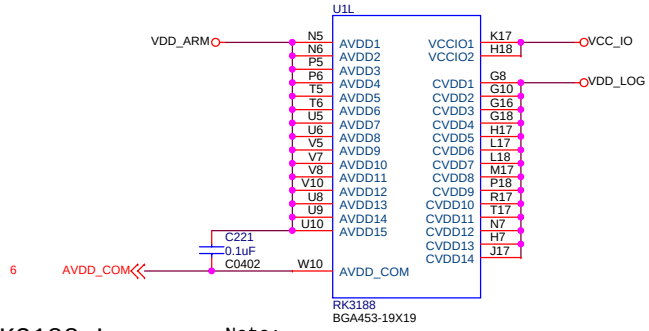

RK3188_L

Note:
Place these filter capacitors under CPU.

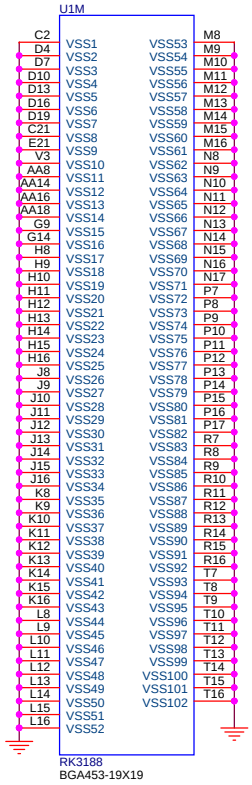

RK3188_M

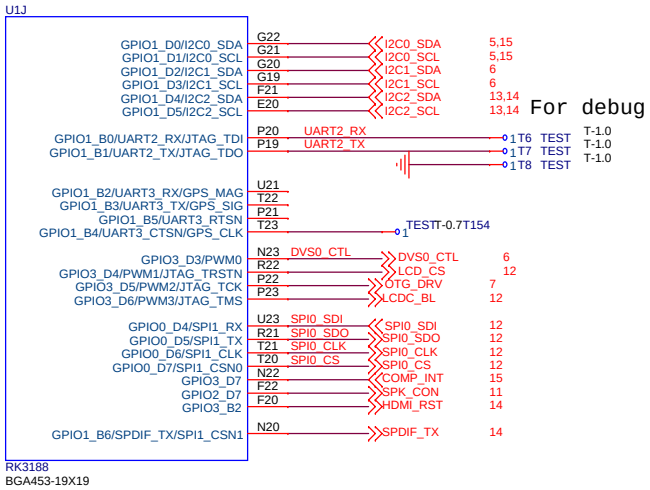

RK3188_J

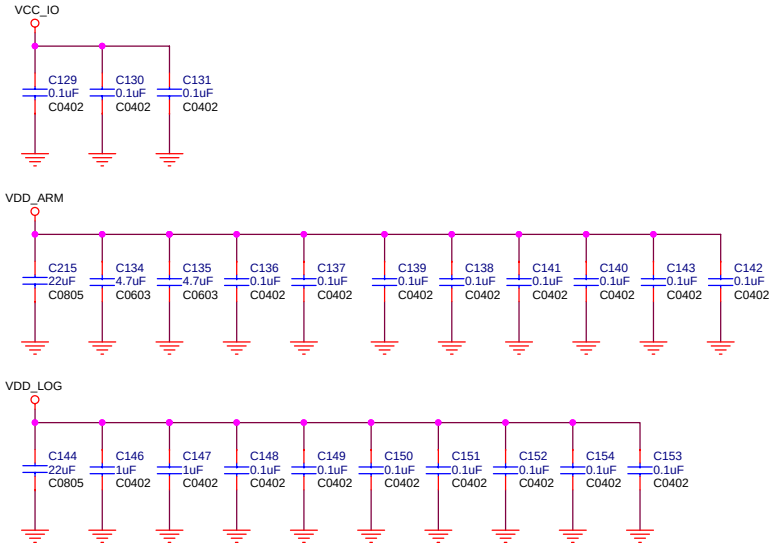

RK3188 CORE POWER FILTER

Rockchip 瑞芯微电子	福州瑞芯微电子有限公司
Title: GPIO	
File: RK3188_REF_ACT8846_1CELL	REV:1.0
Create Date: Friday, January 18, 2013	Page Num:10
Modify Date: Friday, February 01, 2013	Page Total:17

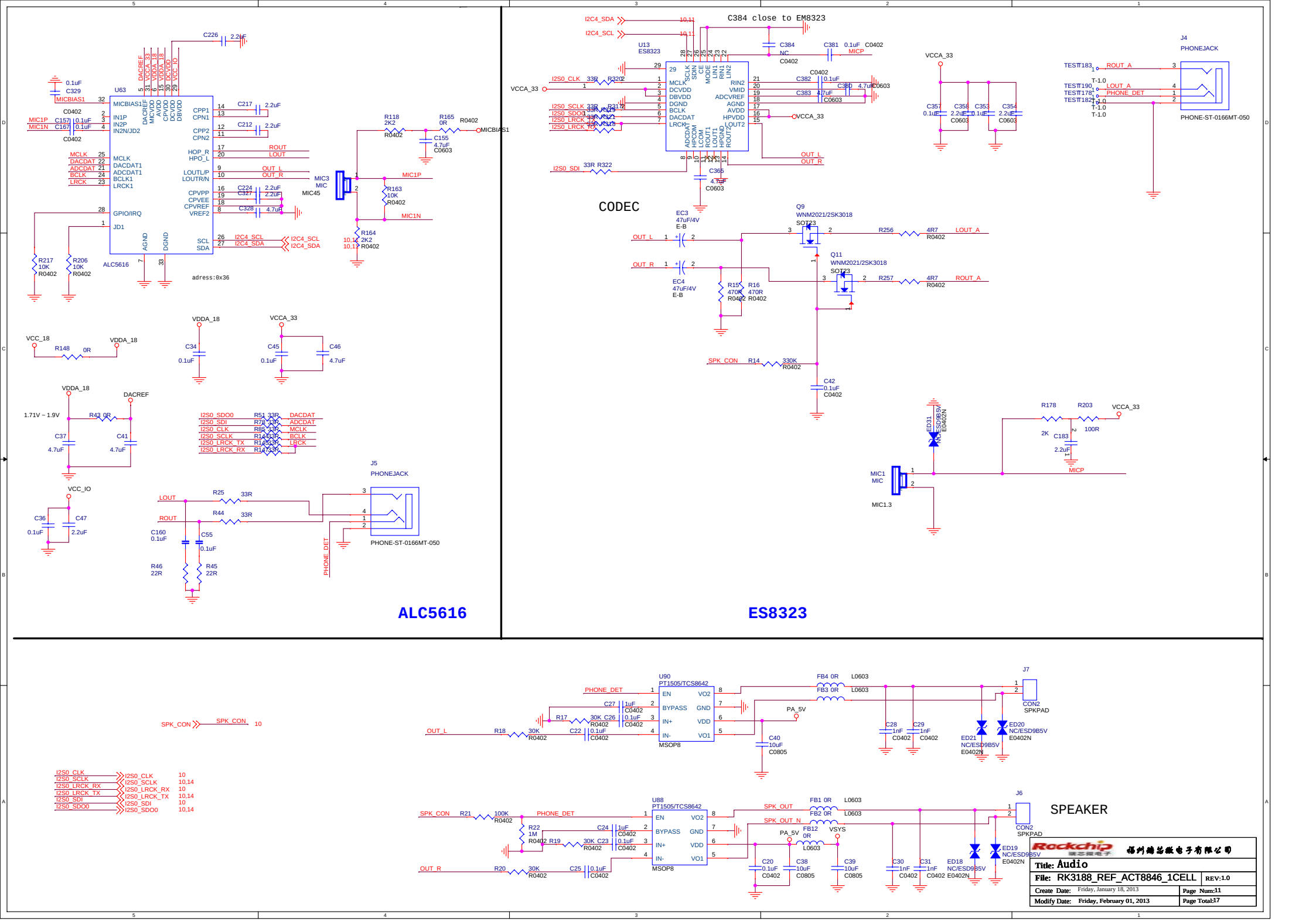
ALC5616
U63
adress:0x36
ES8323
U13
C384 close to EM8323
CODEC
J4
PHONEJACK
PHONE-ST-0166MT-050
J5
PHONEJACK
PHONE-ST-0166MT-050
Q9
WNM2021/2SK3018
Q11
WNM2021/2SK3018
MIC1
MIC
MIC1.3
MIC3
MIC
MIC45
U90
PT1505/TCS8642
MSOP8
U88
PT1505/TCS8642
MSOP8
J7
CON2
SPKPAD
J6
CON2
SPKPAD
SPEAKER
Rockchip
福州瑞芯微电子有限公司
Title: Audio
File: RK3188_REF_ACT8846_1CELL
REV:1.0
Create Date: Friday, January 18, 2013
Page Num:11
Modify Date: Friday, February 01, 2013
Page Total:17

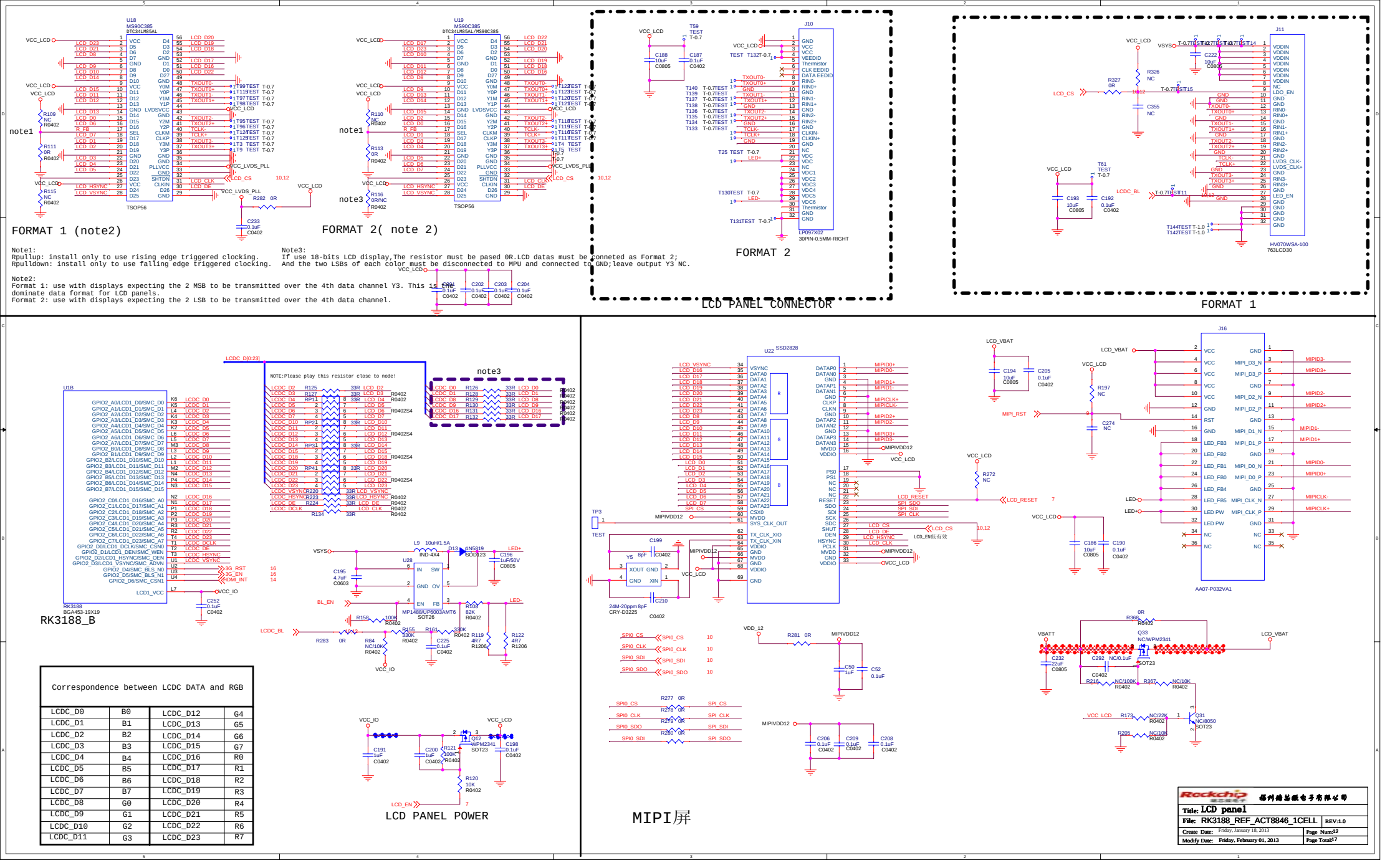
FORMAT 1 (note2)
FORMAT 2(note 2)
FORMAT 2
LCD PANEL CONNECTOR
FORMAT 1
RK3188_B
LCD PANEL POWER
MIPI屏
note1
note3
U18 MS90C385 DTC34LM85AL
U19 MS90C385 DTC34LM85AL/MS98C385
TSOP56
J10
LP097X02 30PIN-0.5MM-RIGHT
J11
HV070WSA-100 763LCD30
U1B
RK3188 BGA453-19X19
U22 SSD2828
J16
AA07-P032VA1
U28 MP1488/UP6003AMT6 SOT26
Q12 WPM2341 SOT23
Q33 NC/WPM2341 SOT23
Q31 NC/8050 SOT23
Correspondence between LCDC DATA and RGB
LCDC_D0 B0 LCDC_D12 G4
LCDC_D1 B1 LCDC_D13 G5
LCDC_D2 B2 LCDC_D14 G6
LCDC_D3 B3 LCDC_D15 G7
LCDC_D4 B4 LCDC_D16 R0
LCDC_D5 B5 LCDC_D17 R1
LCDC_D6 B6 LCDC_D18 R2
LCDC_D7 B7 LCDC_D19 R3
LCDC_D8 G0 LCDC_D20 R4
LCDC_D9 G1 LCDC_D21 R5
LCDC_D10 G2 LCDC_D22 R6
LCDC_D11 G3 LCDC_D23 R7
Rockchip 瑞芯微电子有限公司
Title: LCD panel
File: RK3188_REF_ACT8846_1CELL REV:1.0
Create Date: Friday, January 18, 2013 Page Num:12
Modify Date: Friday, February 01, 2013 Page Total:17

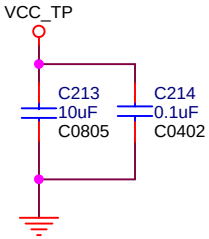

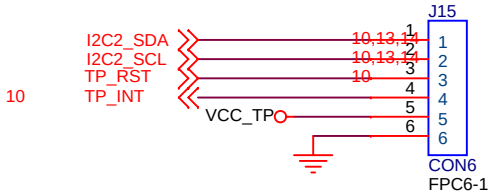

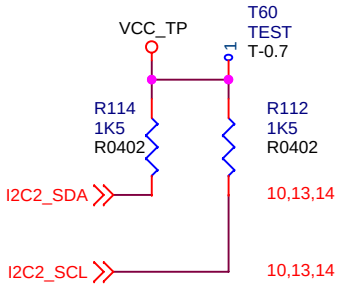

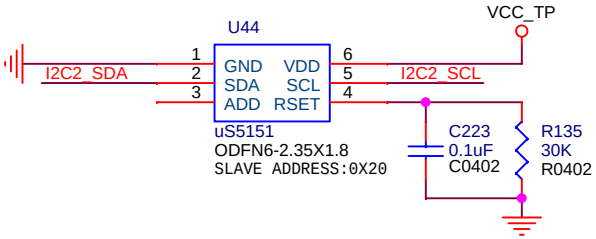

LIGHT SENSOR(OPTION)

Rockchip 瑞芯微电子	福州瑞芯微电子有限公司	
Title: Touch panel		
File: RK3188_REF_ACT8846_1CELL		REV:1.0
Create Date: Friday, January 18, 2013		Page Num:13
Modify Date: Friday, February 01, 2013		Page Total:17

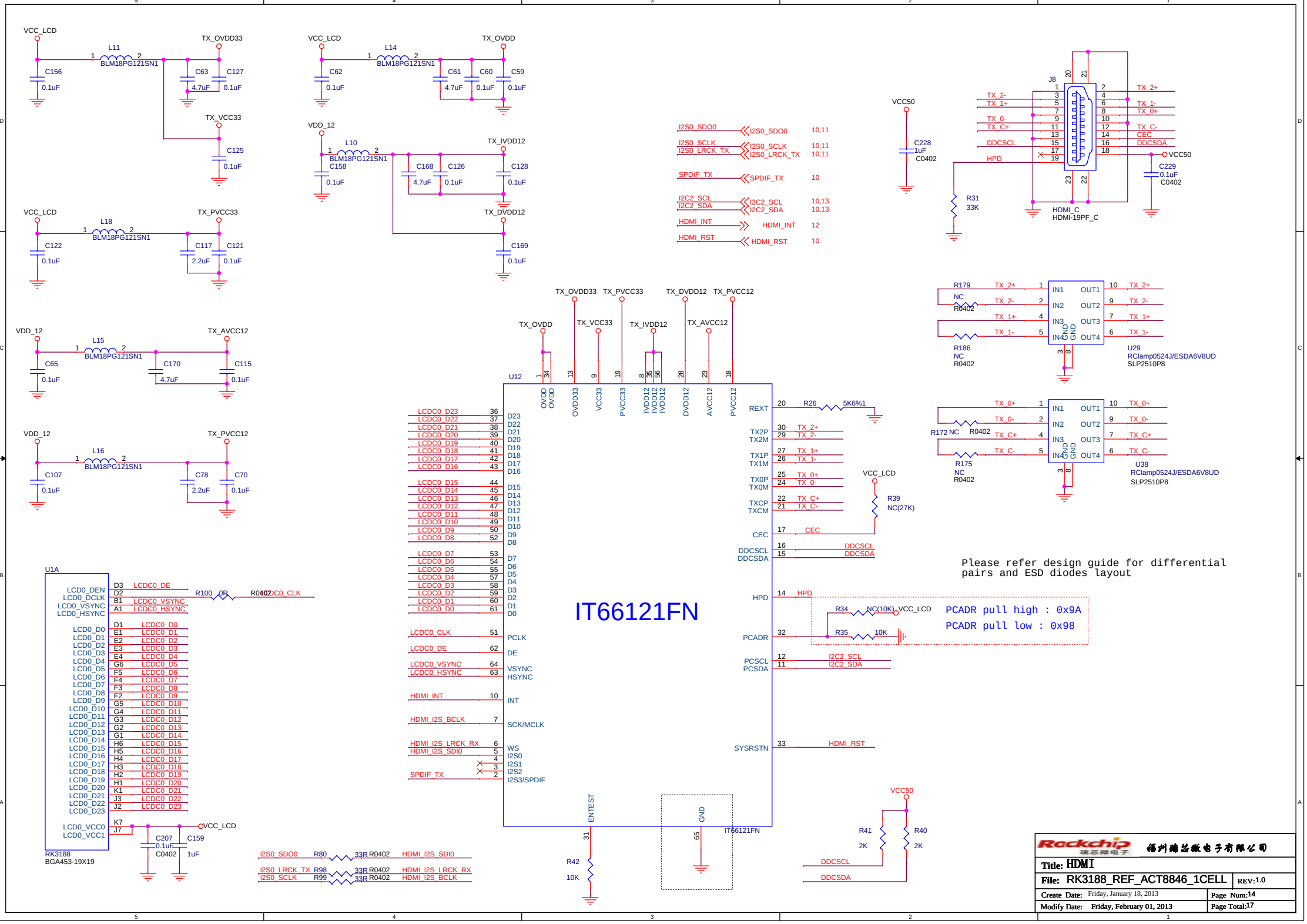
VCC_LCD
L11
BLM18PG121SN1
TX_OVDD33
C156
0.1uF
C63
4.7uF
C127
0.1uF
TX_VCC33
C125
0.1uF
VCC_LCD
L14
BLM18PG121SN1
TX_OVDD
C62
0.1uF
C61
4.7uF
C60
0.1uF
C59
0.1uF
VDD_12
L10
BLM18PG121SN1
C158
0.1uF
C168
4.7uF
C126
0.1uF
TX_IVDD12
C128
0.1uF
TX_DVDD12
C169
0.1uF
VCC_LCD
L18
BLM18PG121SN1
TX_PVCC33
C122
0.1uF
C117
2.2uF
C121
0.1uF
VDD_12
L15
BLM18PG121SN1
TX_AVCC12
C65
0.1uF
C170
4.7uF
C115
0.1uF
VDD_12
L16
BLM18PG121SN1
TX_PVCC12
C107
0.1uF
C78
2.2uF
C70
0.1uF
I2S0_SDO0
I2S0_SCLK
I2S0_LRCK_TX
SPDIF_TX
I2C2_SCL
I2C2_SDA
HDMI_INT
HDMI_RST
VCC50
C228
1uF
C0402
J8
TX_2-
TX_1+
TX_0-
TX_C+
DDCSCL
HPD
TX_2+
TX_1-
TX_0+
TX_C-
CEC
DDCSDA
C229
0.1uF
C0402
R31
33K
HDMI_C
HDMI-19PF_C
R179
NC
R0402
R186
NC
R0402
U29
RClamp0524J/ESDA6V8UD
SLP2510P8
R172 NC
R0402
R175
NC
R0402
U38
RClamp0524J/ESDA6V8UD
SLP2510P8
TX_OVDD33
TX_PVCC33
TX_DVDD12
TX_PVCC12
TX_OVDD
TX_VCC33
TX_IVDD12
TX_AVCC12
U12
IT66121FN
REXT
R26
5K6%1
VCC_LCD
R39
NC(27K)
PCADR
R34
NC(10K)
R35
10K
PCADR pull high : 0x9A
PCADR pull low : 0x98
SYSRSTN
HDMI_RST
ENTEST
R42
10K
GND
IT66121FN
VCC50
R41
2K
R40
2K
DDCSCL
DDCSDA
Please refer design guide for differential pairs and ESD diodes layout
U1A
RK3188
BGA453-19X19
R100 0R
R0402
LCDC0_CLK
LCDC0_DE
LCDC0_VSYNC
LCDC0_HSYNC
LCDC0_D0
LCDC0_D1
LCDC0_D2
LCDC0_D3
LCDC0_D4
LCDC0_D5
LCDC0_D6
LCDC0_D7
LCDC0_D8
LCDC0_D9
LCDC0_D10
LCDC0_D11
LCDC0_D12
LCDC0_D13
LCDC0_D14
LCDC0_D15
LCDC0_D16
LCDC0_D17
LCDC0_D18
LCDC0_D19
LCDC0_D20
LCDC0_D21
LCDC0_D22
LCDC0_D23
LCDC0_VCC0
LCDC0_VCC1
VCC_LCD
C207
0.1uF
C0402
C159
1uF
I2S0_SDO0
R80
33R R0402
HDMI_I2S_SDI0
I2S0_LRCK_TX
R98
33R R0402
HDMI_I2S_LRCK_RX
I2S0_SCLK
R99
33R R0402
HDMI_I2S_BCLK
Rockchip
福州瑞芯微电子有限公司
Title: HDMI
File: RK3188_REF_ACT8846_1CELL
REV:1.0
Create Date: Friday, January 18, 2013
Page Num:14
Modify Date: Friday, February 01, 2013
Page Total:17

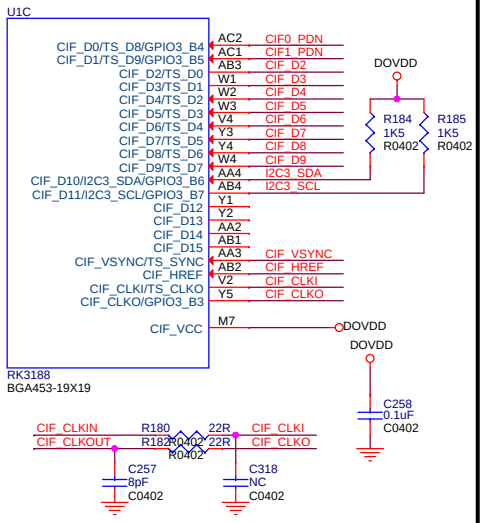

RK3188_C

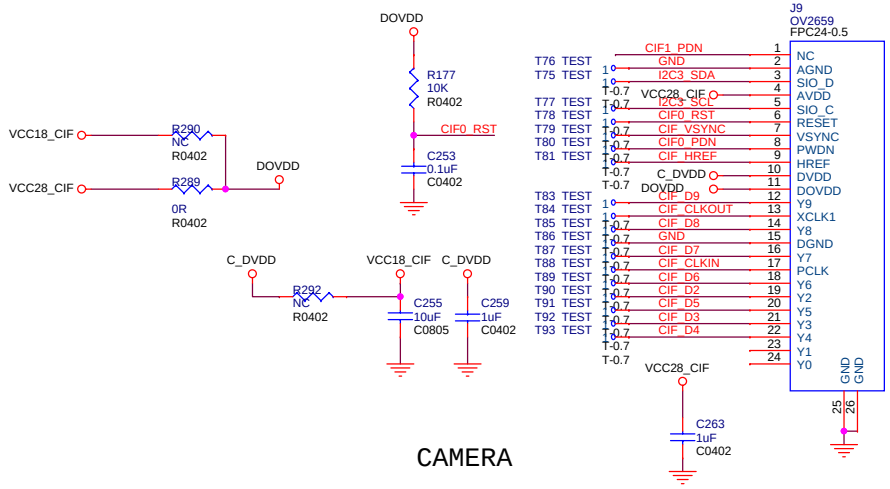

CAMERA

Note: If using other sensor modules,
follow to the requirements of SPEC on the power supply.

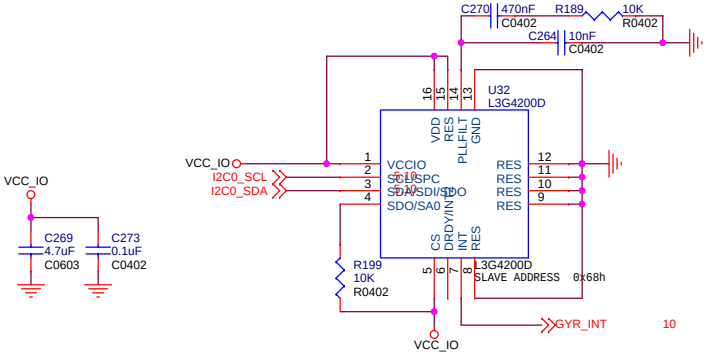

Note:
The first pin of Gyroscope must be
place on the lower left corner of PCB.

Gyroscope

	LIS3DH/ MMA8452Q	LSM303D
C303	NC	4.7uF
R190	0ohm	NC
R192	0ohm	NC
C265	0.1uF	2.2uF
U34	AK8963C	NC

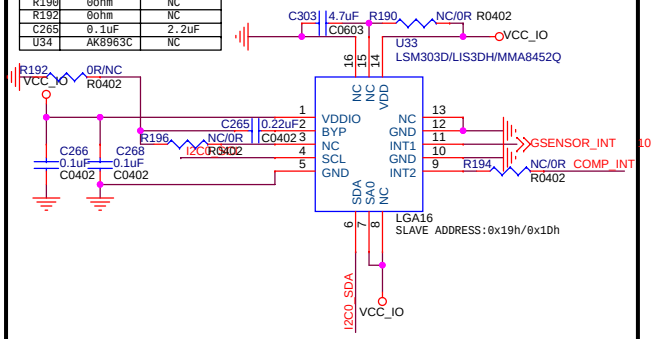

Note:
The first pin of G-sensor must be
place on the lower left corner of PCB.

3D G-Sensor

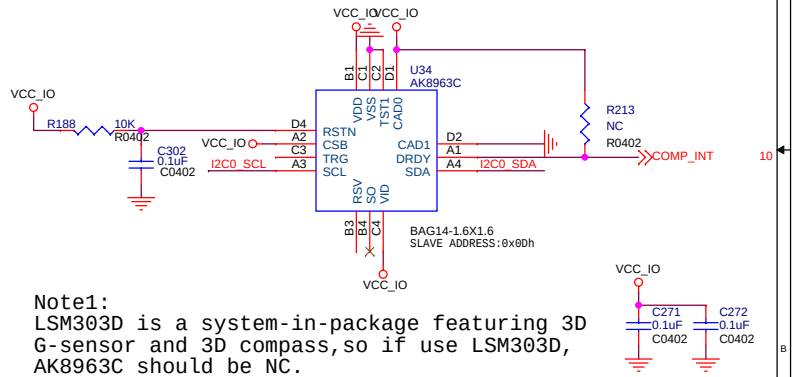

Note1:
LSM303D is a system-in-package featuring 3D
G-sensor and 3D compass,so if use LSM303D,
AK8963C should be NC.

Note2:
The first pin of AK8963C must be
place on the lower left corner of PCB.

Compass

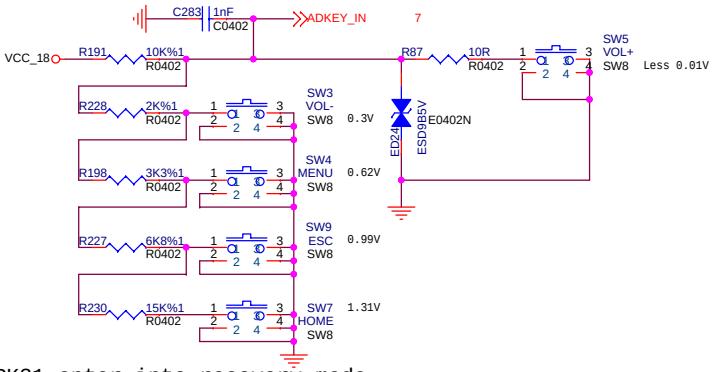

KEY BAORD

When the system power on, the Adkey_in level is 0V, RK31 enter into recovery mode.

Rockchip 瑞芯微电子 福州瑞芯微电子有限公司

Title: Camera/G_Sensor/Key/COMP/IR	
File: RK3188_REF_ACT8846_1CELL	REV:1.0
Create Date: Friday, January 18, 2013	Page Num:15
Modify Date: Friday, February 01, 2013	Page Total:17

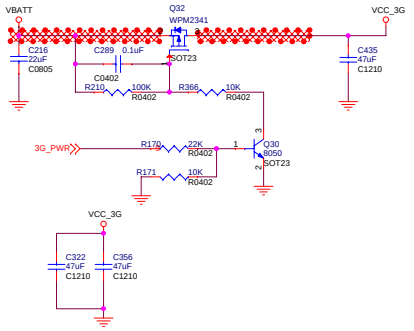

PCB POWER WIRE WIDTH INDICATE

	above 80 miles
	above 50 miles
	above 30 miles
	above 12 miles
No indicate	Under needs

3G POWER

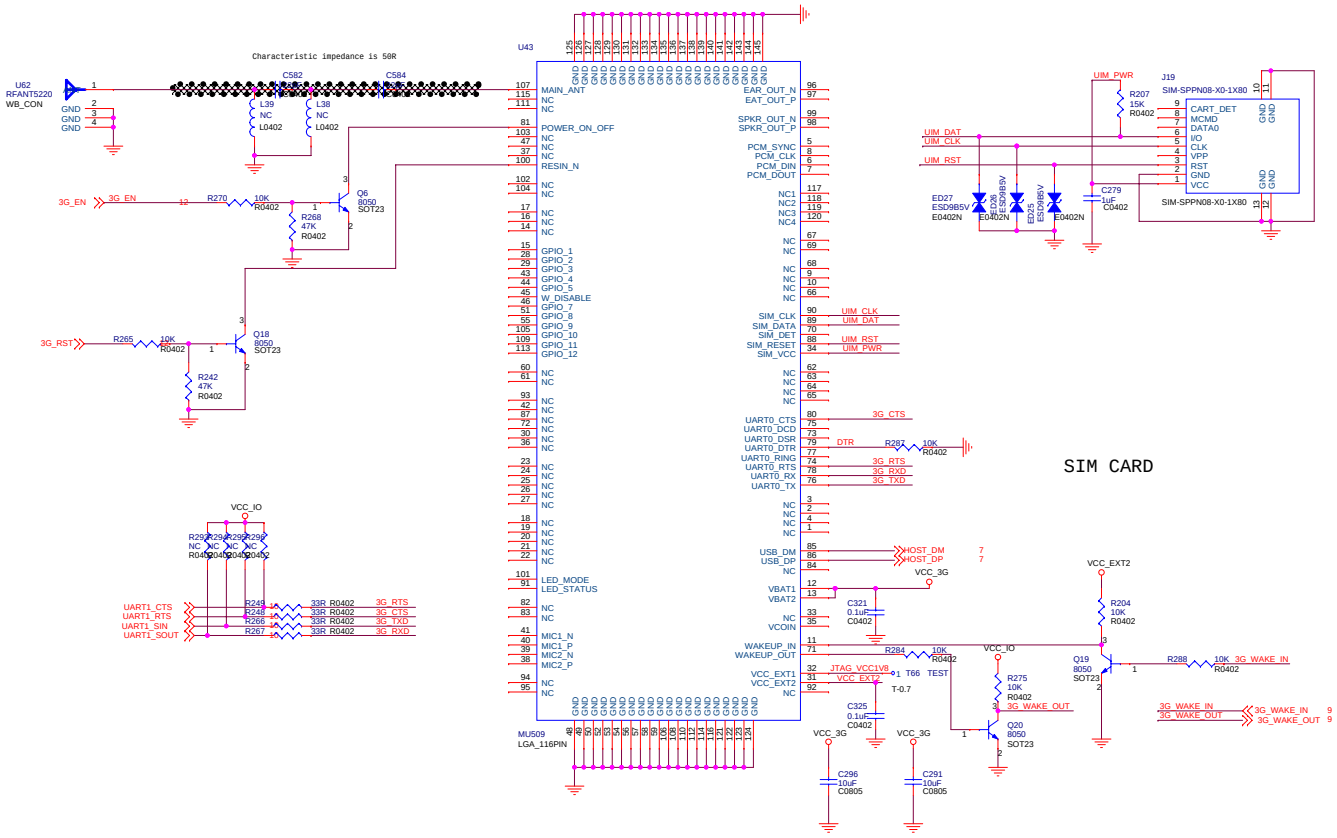

3G MODULE MU509 (OPTION1)

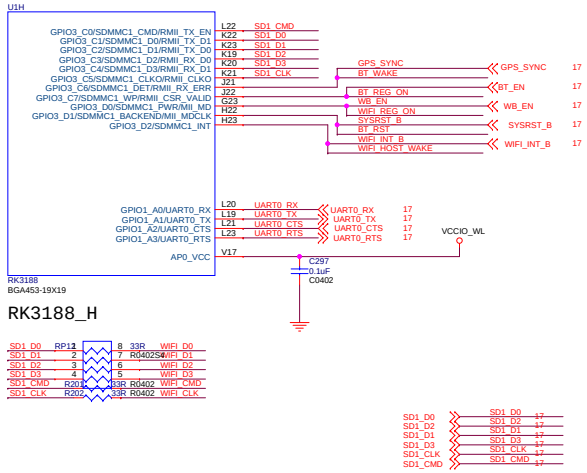

RK3188_H

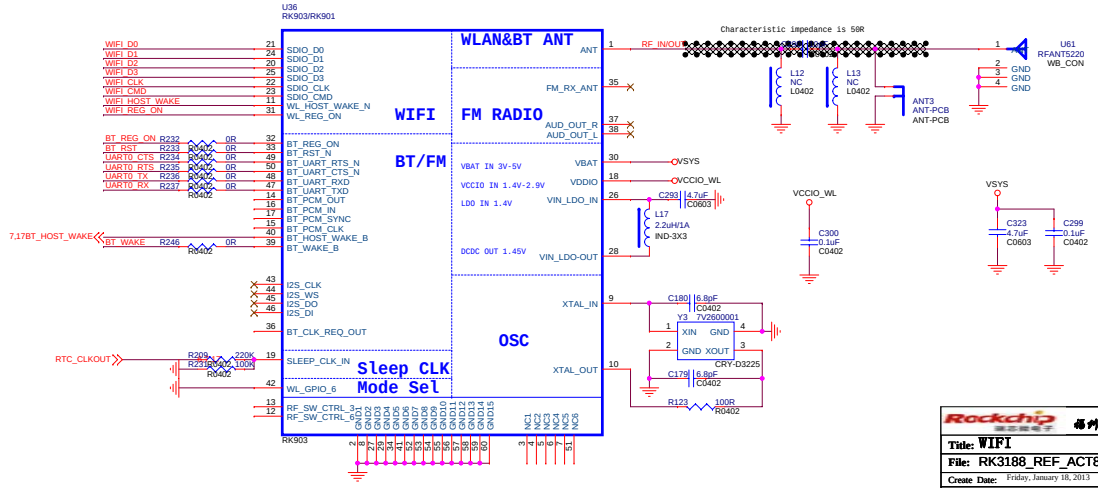

Note :PLS design the RF under RK RF LAYOUT guide;
For more suggestions, please refer to the SPEC
of the wireless IC

Title: WIFI	
File: RK3188_REF_ACT8846_1CELL	REV:1.0
Create Date: Friday, January 18, 2013	Page Num:16
Modify Date: Friday, February 01, 2013	Page Total:17

四合一	二合一	单WIFI(SDIO)	公司
WL-SM01B(MT6620)	WL-SM01B-MT6622(MT5931+MT6620)	WL-SM01B(MTK 5931)	芯动力
M500	无	无	群登
MLK031A-MT6620	MLK029-MT6622+MT5931	MLK-027A	华普

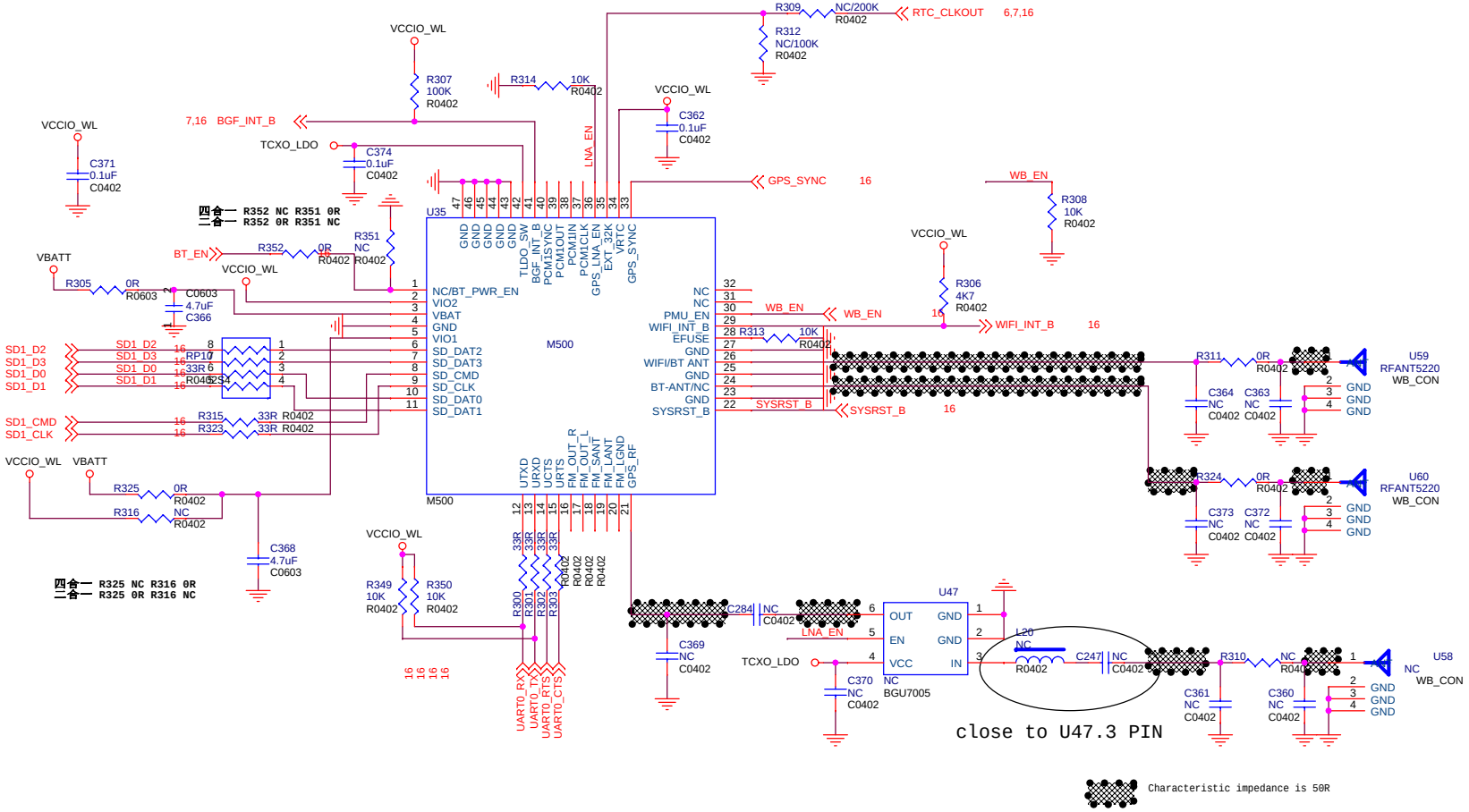

Rockchip 瑞芯微电子 福州瑞芯微电子有限公司

Title: 4IN1 or 2IN1	
File: RK3188_REF_ACT8846_1CELL	REV:1.0
Create Date: Friday, January 18, 2013	Page Num:17
Modify Date: Friday, February 01, 2013	Page Total:17